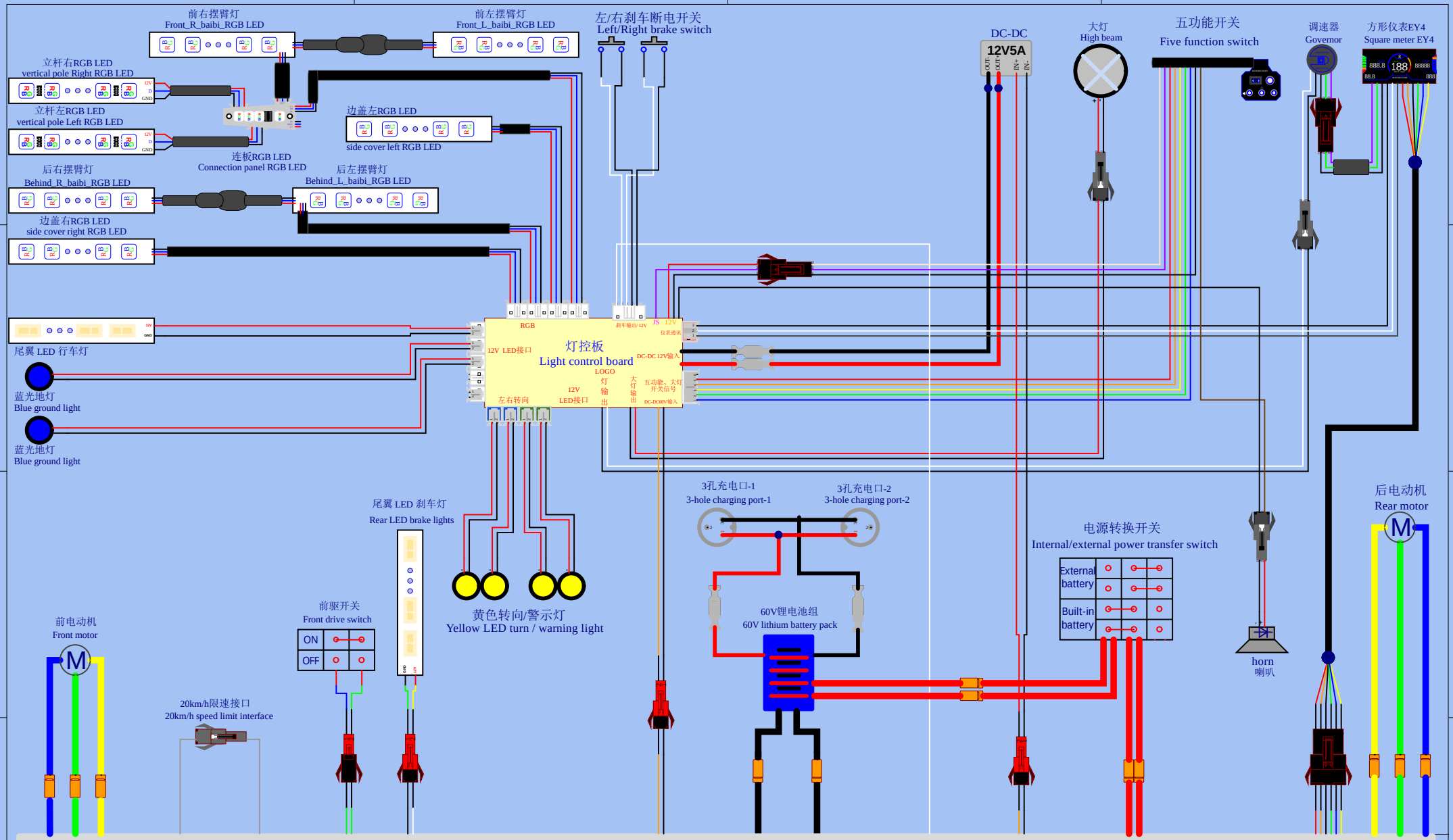

DT-VICTOR LIMITED 二合一直流无刷电机控制器

DT-VICTOR LIMITED type two-in-one brushless motor controller

Date:	2024/1/13	Sheet	of
File:	E:\Q\..\DT-VICTOR LTD.SchDoc	Drawn By:	